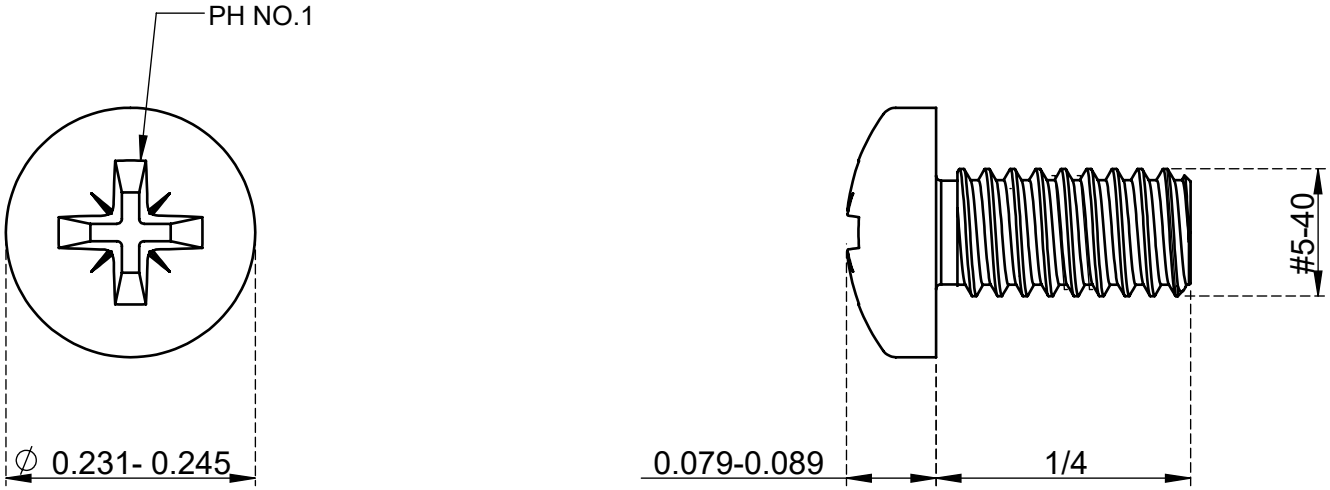

Email : Sales@superneer.com

MPS0504B

#5-40 x 1/4" Pan Head Phillips Machine Screw
Steel Black ANSI/ASME B18.6.3

Material	Carbon Steel	Finish	Black
Weight	0.690 g	www.superneer.com	

SUPERNEER